Advanced Monolithic Systems

AMS1117

1A LOW DROPOUT VOLTAGE REGULATOR

RoHS compliant

FEATURES

- **Three Terminal Adjustable or Fixed Voltages* 1.5V, 1.8V, 2.5V, 2.85V, 3.3V and 5.0V**
- **Output Current of 1A**
- **Operates Down to 1V Dropout**
- **Line Regulation: 0.2% Max.**
- **Load Regulation: 0.4% Max.**
- **SOT-223, TO-252 and SO-8 package available**

APPLICATIONS

- **High Efficiency Linear Regulators**
- **Post Regulators for Switching Supplies**
- **5V to 3.3V Linear Regulator**
- **Battery Chargers**
- **Active SCSI Terminators**
- **Power Management for Notebook**
- **Battery Powered Instrumentation**

GENERAL DESCRIPTION

The AMS1117 series of adjustable and fixed voltage regulators are designed to provide 1A output current and to operate down to 1V input-to-output differential. The dropout voltage of the device is guaranteed maximum 1.3V at maximum output current, decreasing at lower load currents.

On-chip trimming adjusts the reference voltage to 1%. Current limit is also trimmed, minimizing the stress under overload conditions on both the regulator and power source circuitry.

The AMS1117 devices are pin compatible with other three-terminal SCSI regulators and are offered in the low profile surface mount SOT-223 package, in the 8L SOIC package and in the TO-252 (DPAK) plastic package.

ORDERING INFORMATION:

PACKAGE TYPE			OPERATING JUNCTION TEMPERATURE RANGE
TO-252	SOT-223	8L SOIC	
AMS1117CD	AMS1117	AMS1117CS	-40 to 125° C
AMS1117CD-1.5	AMS1117-1.5	AMS1117CS-1.5	-40 to 125° C
AMS1117CD-1.8	AMS1117-1.8	AMS1117CS-1.8	-40 to 125° C
AMS1117CD-2.5	AMS1117-2.5	AMS1117CS-2.5	-40 to 125° C
AMS1117CD-2.85	AMS1117-2.85	AMS1117CS-2.85	-40 to 125° C
AMS1117CD-3.3	AMS1117-3.3	AMS1117CS-3.3	-40 to 125° C
AMS1117CD-5.0	AMS1117-5.0	AMS1117CS-5.0	-40 to 125° C

*For additional available fixed voltages contact factory.

8L SOIC Top View

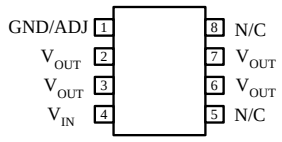

PIN CONNECTIONS

3 PIN FIXED/ADJUSTABLE VERSION

1- Ground/Adjust
2- V_{OUT}
3- V_{IN}

SOT-223 Top View

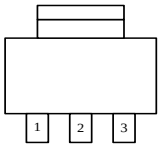

TO-252 FRONT VIEW

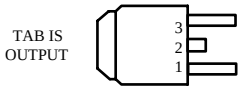

Advanced Monolithic Systems, Inc. www.advanced-monolithic.com Phone (925) 443-0722 Fax (925) 443-0723

ABSOLUTE MAXIMUM RATINGS (Note 1)

Power Dissipation	Internally limited
Input Voltage	15V
Operating Junction Temperature	
Control Section	0°C to 125°C
Power Transistor	0°C to 150°C
Storage temperature	- 65°C to +150°C

Soldering information	
Lead Temperature (25 sec)	265°C
Thermal Resistance	
SO-8 package	φ_{JA}= 160°C/W
TO-252 package	φ_{JA}= 80°C/W
SOT-223 package	φ_{JA}= 90°C/W*

* With package soldering to copper area over backside ground plane or internal power plane φ_{JA} can vary from 46°C/W to >90°C/W depending on mounting technique and the size of the copper area.

ELECTRICAL CHARACTERISTICS

Electrical Characteristics at I_{OUT} = 0 mA, and T_J = +25°C unless otherwise specified.

Parameter	Device	Conditions	Min	Typ	Max	Units
Reference Voltage (Note 2)	AMS1117	I_{OUT} = 10 mA 10mA ≤ I_{OUT} ≤ 1A, 1.5V≤ (V_{IN} - V_{OUT}) ≤ 12V	1.238 **1.225**	1.250 **1.250**	1.262 **1.270**	V V
Output Voltage (Note 2)	AMS1117-1.5	0 ≤ I_{OUT} ≤ 1A , 3.0V≤ V_{IN} ≤ 12V	1.485 **1.476**	1.500 **1.500**	1.515 **1.524**	V V
	AMS1117-1.8	0 ≤ I_{OUT} ≤ 1A , 3.3V≤ V_{IN} ≤ 12V	1.782 **1.773**	1.800 **1.800**	1.818 **1.827**	V V
	AMS1117-2.5	0 ≤ I_{OUT} ≤ 1A , 4.0V≤ V_{IN} ≤ 12V	2.475 **2.460**	2.500 **2.500**	2.525 **2.560**	V V
	AMS1117-2.85	0 ≤ I_{OUT} ≤ 1A , 4.35V≤ V_{IN} ≤ 12V	2.82 **2.79**	2.850 **2.850**	2.88 **2.91**	V V
	AMS1117-3.3	0 ≤ I_{OUT} ≤ 1A , 4.75V ≤ V_{IN} ≤ 12V	3.267 **3.235**	3.300 **3.300**	3.333 **3.365**	V V
	AMS1117-5.0	0 ≤ I_{OUT} ≤ 1A , 6.5V ≤ V_{IN} ≤ 12V	4.950 **4.900**	5.000 **5.000**	5.050 **5.100**	V V
Line Regulation	AMS1117	I_{LOAD} = 10 mA , 1.5V≤ (V_{IN} - V_{OUT}) ≤ 12V		0.015 **0.035**	0.2 **0.2**	% %
	AMS1117-1.5	3.0V≤ V_{IN} ≤ 12V		0.3 **0.6**	5 **6**	mV mV
	AMS1117-1.8	3.3V≤ V_{IN} ≤ 12V		0.3 **0.6**	5 **6**	mV mV
	AMS1117-2.5	4.0V≤ V_{IN} ≤ 12V		0.3 **0.6**	6 **6**	mV mV
	AMS1117-2.85	4.35V≤ V_{IN} ≤ 12V		0.3 **0.6**	6 **6**	mV mV
	AMS1117-3.3	4.75V≤ V_{IN} ≤ 12V		0.5 **1.0**	10 **10**	mV mV
	AMS1117-5.0	6.5V≤ V_{IN} ≤ 12V		0.5 **1.0**	10 **10**	mV mV
Load Regulation (Notes 2, 3)	AMS1117	(V_{IN} - V_{OUT}) =3V, 10mA ≤ I_{OUT} ≤ 1A		0.1 **0.2**	0.3 **0.4**	% %
	AMS1117-1.5	V_{IN} = 5V, 0 ≤ I_{OUT} ≤ 1A		3 **6**	10 **20**	mV mV
	AMS1117-1.8	V_{IN} = 5V, 0 ≤ I_{OUT} ≤ 1A		3 **6**	10 **20**	mV mV
	AMS1117-2.5	V_{IN} = 5V, 0 ≤ I_{OUT} ≤ 1A		3 **6**	12 **20**	mV mV

ELECTRICAL CHARACTERISTICS

Electrical Characteristics at I_{OUT} = 0 mA, and T_J = +25°C unless otherwise specified.

Parameter	Device	Conditions	Min	Typ	Max	Units
Load Regulation (Notes 2, 3)	AMS1117-2.85	V_{IN} = 5V, 0 ≤ I_{OUT} ≤ 1A		3 **6**	12 **20**	mV mV
	AMS1117-3.3	V_{IN} = 5V, 0 ≤ I_{OUT} ≤ 1A		3 **7**	15 **25**	mV mV
	AMS1117-5.0	V_{IN} = 8V, 0 ≤ I_{OUT} ≤ 1A		5 **10**	20 **35**	mV mV
Dropout Voltage (V_{IN} - V_{OUT})	AMS1117-1.5/-1.8/-2.5/-2.85/-3.3/-5.0	ΔV_{OUT} , ΔV_{REF} = 1%, I_{OUT} = 1A (Note 4)		**1.1**	**1.3**	V
Current Limit	AMS1117-1.5/-1.8/-2.5/-2.85/-3.3/-5.0	(V_{IN} - V_{OUT}) = 5V	**900**	**1,100**	**1,500**	mA
Minimum Load Current	AMS1117	(V_{IN} - V_{OUT}) = 12V (Note 5)		**5**	**10**	mA
Quiescent Current	AMS1117-1.5/-1.8/-2.5/-2.85/-3.3/-5.0	V_{IN} ≤ 12V		**5**	**10**	mA
Ripple Rejection	AMS1117	f =120Hz , C_{OUT} = 22µF Tantalum, I_{OUT} = 1A, (V_{IN}-V_{OUT}) = 3V, C_{ADJ} =10µF	**60**	**75**		dB
	AMS1117-1.5/-1.8/-2.5/-2.85	f =120Hz , C_{OUT} = 22µF Tantalum, I_{OUT} = 1A, V_{IN} = 6V	**60**	**72**		dB
	AMS1117-3.3	f =120Hz , C_{OUT} = 22µF Tantalum, I_{OUT} = 1A V_{IN} = 6.3V	**60**	**72**		dB
	AMS1117-5.0	f =120Hz , C_{OUT} = 22µF Tantalum, I_{OUT} = 1A V_{IN} = 8V	**60**	**68**		dB
Thermal Regulation	AMS1117	T_A = 25°C, 30ms pulse		0.008	0.04	%W
Adjust Pin Current	AMS1117	10mA ≤ I_{OUT} ≤ 1A , 1.5V≤ (V_{IN} - V_{OUT}) ≤ 12V		55	 **120**	µA µA
Adjust Pin Current Change	AMS1117	10mA ≤ I_{OUT} ≤ 1A , 1.5V≤ (V_{IN} - V_{OUT}) ≤ 12V		**0.2**	**5**	µA
Temperature Stability				**0.5**		%
Long Term Stability		T_A =125°C, 1000Hrs		0.3	1	%
RMS Output Noise (% of V_{OUT})		T_A = 25°C , 10Hz ≤ f ≤ 10kHz		0.003		%
Thermal Resistance Junction-to-Case					15	°C/W

Parameters identified with **boldface type** apply over the full operating temperature range.

Note 1: Absolute Maximum Ratings indicate limits beyond which damage to the device may occur. For guaranteed specifications and test conditions, see the Electrical Characteristics. The guaranteed specifications apply only for the test conditions listed.

Note 2: Line and Load regulation are guaranteed up to the maximum power dissipation of 1.2 W. Power dissipation is determined by the input/output differential and the output current. Guaranteed maximum power dissipation will not be available over the full input/output range.

Note 3: See thermal regulation specifications for changes in output voltage due to heating effects. Line and load regulation are measured at a constant junction temperature by low duty cycle pulse testing. Load regulation is measured at the output lead ~1/8" from the package.

Note 4: Dropout voltage is specified over the full output current range of the device.

Note 5: Minimum load current is defined as the minimum output current required to maintain regulation. When 1.5V ≤ (V_{IN} - V_{OUT}) ≤ 12V the device is guaranteed to regulate if the output current is greater than 10mA.

APPLICATION HINTS

The AMS1117 series of adjustable and fixed regulators are easy to use and are protected against short circuit and thermal overloads. Thermal protection circuitry will shut-down the regulator should the junction temperature exceed 165°C at the sense point.
Pin compatible with older three terminal adjustable regulators, these devices offer the advantage of a lower dropout voltage, more precise reference tolerance and improved reference stability with temperature.

Stability

The circuit design used in the AMS1117 series requires the use of an output capacitor as part of the device frequency compensation. The addition of 22µF solid tantalum on the output will ensure stability for all operating conditions.
When the adjustment terminal is bypassed with a capacitor to improve the ripple rejection, the requirement for an output capacitor increases. The value of 22µF tantalum covers all cases of bypassing the adjustment terminal. Without bypassing the adjustment terminal smaller capacitors can be used with equally good results.
To further improve stability and transient response of these devices larger values of output capacitor can be used.

Protection Diodes

Unlike older regulators, the AMS1117 family does not need any protection diodes between the adjustment pin and the output and from the output to the input to prevent over-stressing the die. Internal resistors are limiting the internal current paths on the AMS1117 adjustment pin, therefore even with capacitors on the adjustment pin no protection diode is needed to ensure device safety under short-circuit conditions.
Diodes between the input and output are not usually needed. Microsecond surge currents of 50A to 100A can be handled by the internal diode between the input and output pins of the device. In normal operations it is difficult to get those values of surge currents even with the use of large output capacitances. If high value output capacitors are used, such as 1000µF to 5000µF and the input pin is instantaneously shorted to ground, damage can occur. A diode from output to input is recommended, when a crowbar circuit at the input of the AMS1117 is used (Figure 1).

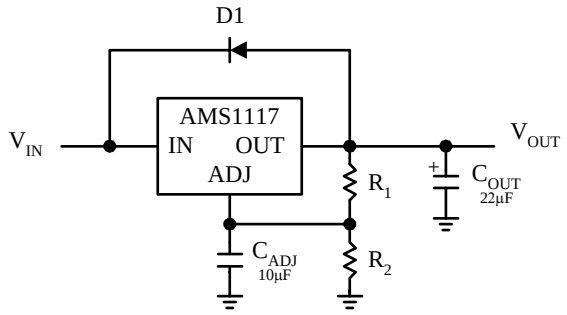

Figure 1.

Output Voltage

The AMS1117 series develops a 1.25V reference voltage between the output and the adjust terminal. Placing a resistor between these two terminals causes a constant current to flow through R1 and down through R2 to set the overall output voltage. This current is normally the specified minimum load current of 10mA. Because I_{ADJ} is very small and constant it represents a small error and it can usually be ignored.

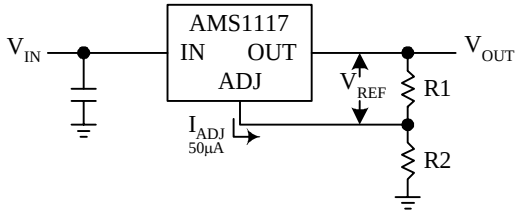

$$V_{OUT} = V_{REF}(1 + R2/R1) + I_{ADJ}R2$$

Figure 2. Basic Adjustable Regulator

Load Regulation

True remote load sensing it is not possible to provide, because the AMS1117 is a three terminal device. The resistance of the wire connecting the regulator to the load will limit the load regulation. The data sheet specification for load regulation is measured at the bottom of the package. Negative side sensing is a true Kelvin connection, with the bottom of the output divider returned to the negative side of the load.
The best load regulation is obtained when the top of the resistor divider R1 is connected directly to the case not to the load. If R1 were connected to the load, the effective resistance between the regulator and the load would be:

$$R_P \times \left(\frac{R2+R1}{R1}\right), \quad R_P = \text{Parasitic Line Resistance}$$

APPLICATION HINTS

Connected as shown , R_P is not multiplied by the divider ratio

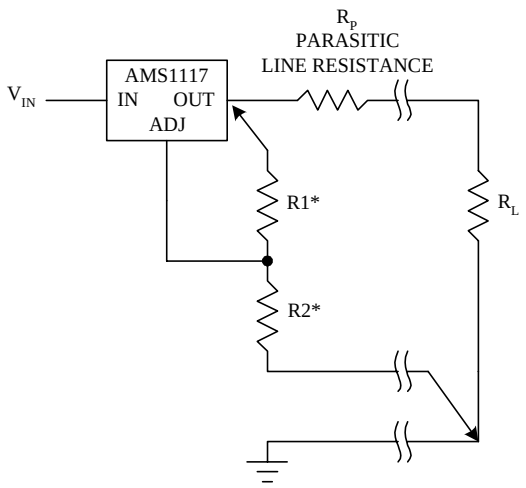

*CONNECT R1 TO CASE
CONNECT R2 TO LOAD

Figure 3. Connections for Best Load Regulation

In the case of fixed voltage devices the top of R1 is connected Kelvin internally, and the ground pin can be used for negative side sensing.

Thermal Considerations

The AMS1117 series have internal power and thermal limiting circuitry designed to protect the device under overload conditions. However maximum junction temperature ratings of 125°C should not be exceeded under continuous normal load conditions.
Careful consideration must be given to all sources of thermal resistance from junction to ambient. For the surface mount package SOT-223 additional heat sources mounted near the device must be considered. The heat dissipation capability of the PC board and its copper traces is used as a heat sink for the device. The thermal resistance from the junction to the tab for the AMS1117 is 15°C/W. Thermal resistance from tab to ambient can be as low as 30°C/W.

The total thermal resistance from junction to ambient can be as low as 45°C/W. This requires a reasonable sized PC board with at least on layer of copper to spread the heat across the board and couple it into the surrounding air.
Experiments have shown that the heat spreading copper layer does not need to be electrically connected to the tab of the device. The PC material can be very effective at transmitting heat between the pad area, attached to the pad of the device, and a ground plane layer either inside or on the opposite side of the board. Although the actual thermal resistance of the PC material is high, the Length/Area ratio of the thermal resistance between layers is small. The data in Table 1, was taken using 1/16" FR-4 board with 1 oz. copper foil, and it can be used as a rough guideline for estimating thermal resistance.
For each application the thermal resistance will be affected by thermal interactions with other components on the board. To determine the actual value some experimentation will be necessary.
The power dissipation of the AMS1117 is equal to:

$P_D = (V_{IN} - V_{OUT})(I_{OUT})$

Maximum junction temperature will be equal to:

$T_J = T_{A(MAX)} + P_D$(Thermal Resistance (junction-to-ambient))

Maximum junction temperature must not exceed 125°C.

Ripple Rejection

The ripple rejection values are measured with the adjustment pin bypassed. The impedance of the adjust pin capacitor at the ripple frequency should be less than the value of R1 (normally 100Ω to 200Ω) for a proper bypassing and ripple rejection approaching the values shown. The size of the required adjust pin capacitor is a function of the input ripple frequency. If R1=100Ω at 120Hz the adjust pin capacitor should be >13µF. At 10kHz only 0.16µF is needed.

The ripple rejection will be a function of output voltage, in circuits without an adjust pin bypass capacitor. The output ripple will increase directly as a ratio of the output voltage to the reference voltage (V_{OUT} / V_{REF}).

Table 1.

COPPER AREA			THERMAL RESISTANCE
TOP SIDE*	BACK SIDE	BOARD AREA	(JUNCTION-TO-AMBIENT)
2500 Sq. mm	2500 Sq. mm	2500 Sq. mm	45°C/W
1000 Sq. mm	2500 Sq. mm	2500 Sq. mm	45°C/W
225 Sq. mm	2500 Sq. mm	2500 Sq. mm	53°C/W
100 Sq. mm	2500 Sq. mm	2500 Sq. mm	59°C/W
1000 Sq. mm	1000 Sq. mm	1000 Sq. mm	52°C/W
1000 Sq. mm	0	1000 Sq. mm	55°C/W

* Tab of device attached to topside copper.

TYPICAL PERFORMANCE CHARACTERISTICS

Minimum Operating Current (Adjustable Device)

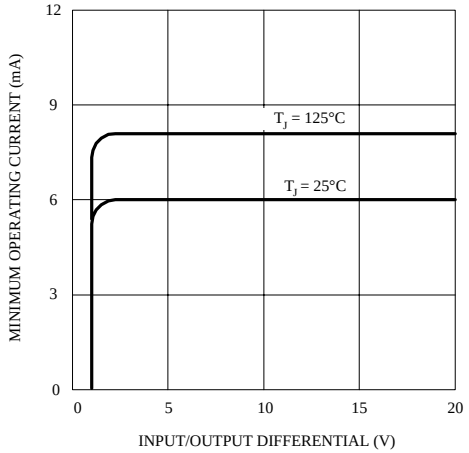

Short-Circuit Current

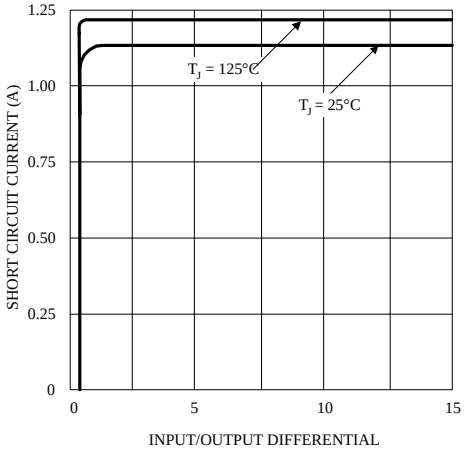

Load Regulation

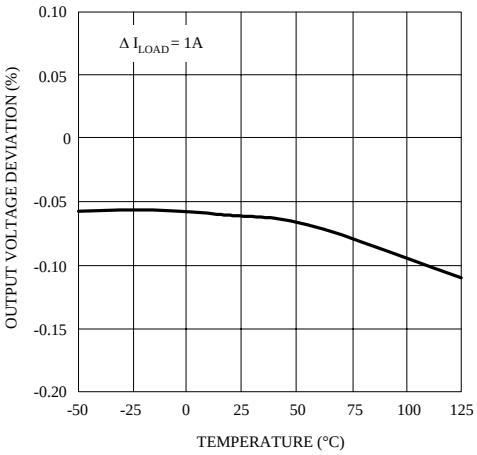

Ripple Rejection vs. Current

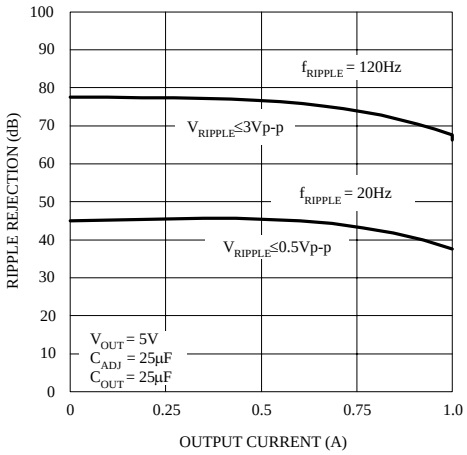

Temperature Stability

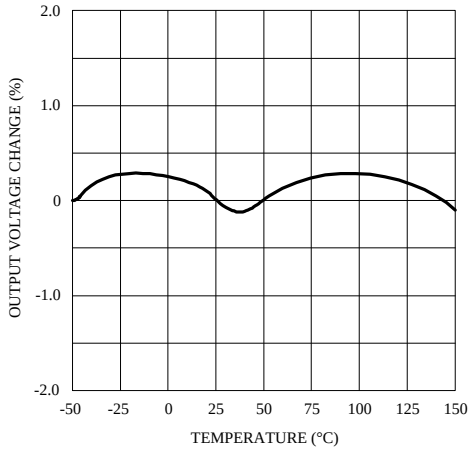

Adjust Pin Current

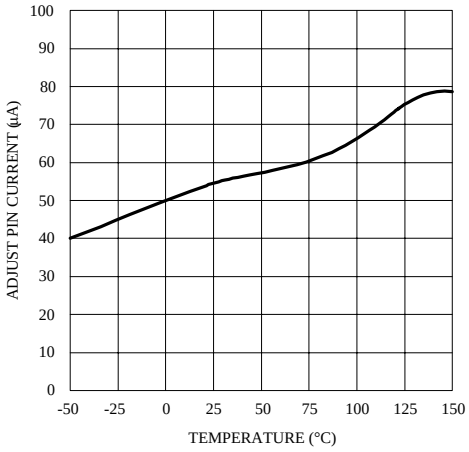

PACKAGE DIMENSIONS inches (millimeters) unless otherwise noted.

TO-252 PLASTIC PACKAGE (D)

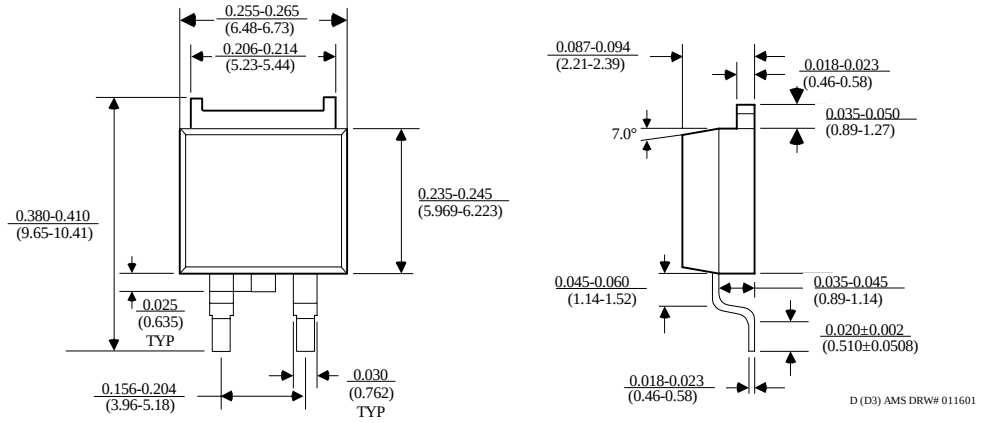

3 LEAD SOT-223 PLASTIC PACKAGE

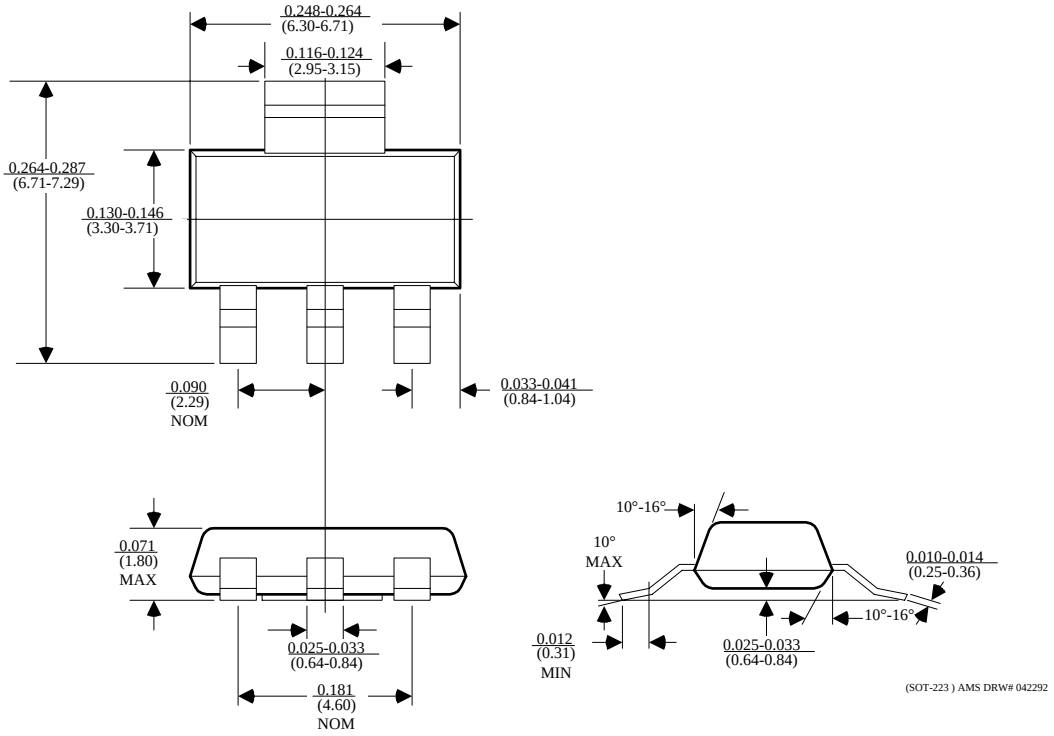

PACKAGE DIMENSIONS inches (millimeters) unless otherwise noted (Continued).

8 LEAD SOIC PLASTIC PACKAGE (S)

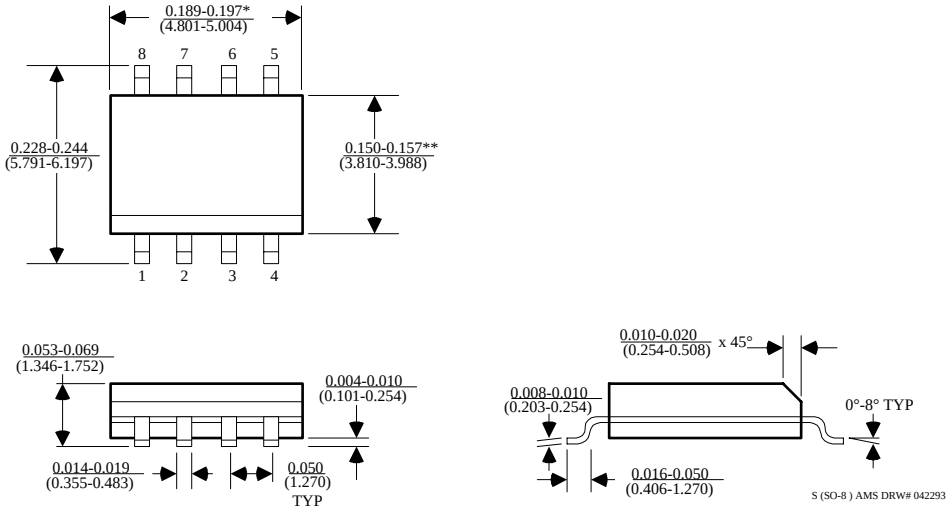

*DIMENSION DOES NOT INCLUDE MOLD FLASH. MOLD FLASH SHALL NOT EXCEED 0.006" (0.152mm) PER SIDE

**DIMENSION DOES NOT INCLUDE INTERLEAD FLASH. INTERLEAD FLASH SHALL NOT EXCEED 0.010" (0.254mm) PER SIDE